CORNER RECORD
WARRICK COUNTY

DESCRIPTION: CENTER OF SEC.

_____ CORNER _____ _____

SECTION 30, T. 4 S. R. 9 W.

2nd PRINICPAL MERIDIAN

WARRICK COUNTY SURVEYOR
MICHAEL F. FELDBUSCH, L.S.

N W E S

INDICATE CORNER REFERENCED

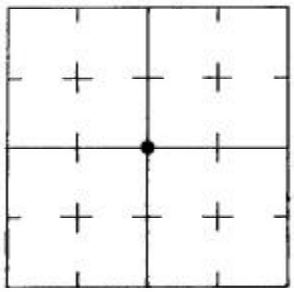

DESCRIBE CORNER REFERENCED

N.V.

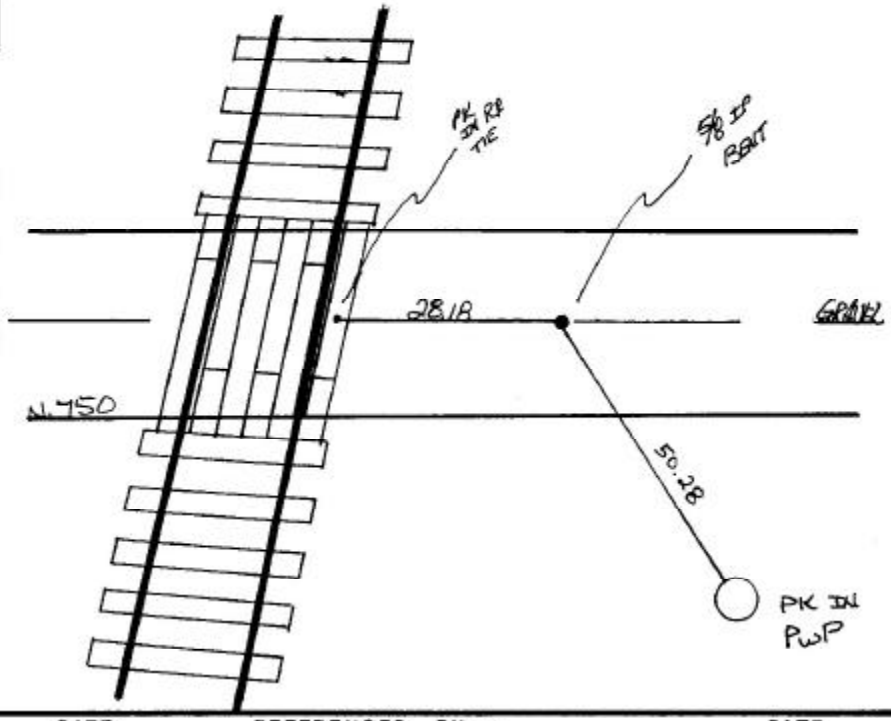

STATE PLANE COORDINATE DATA

INDIANA ZONE: WEST

X _____

Y _____

ESTABLISHED BY:

_____

APPROVED BY	DATE	REFERENCED BY:	DATE
		Larry Beck	5-23-83