CORNER RECORD
WARRICK COUNTY

DESCRIPTION:
SOUTHWEST CORNER
SECTION 3, T. 6 S., R. 9 W.
2nd PRINCIPAL MERIDIAN

WARRICK COUNTY SURVEYOR
KARAN HARGRAVE-BARNHILL

SURVEYOR N W E S WARRICK COUNTY INDIANA

FOR NOTES ON CORNER HISTORY SEE REVERSE.

INDICATE CORNER REFERENCED:

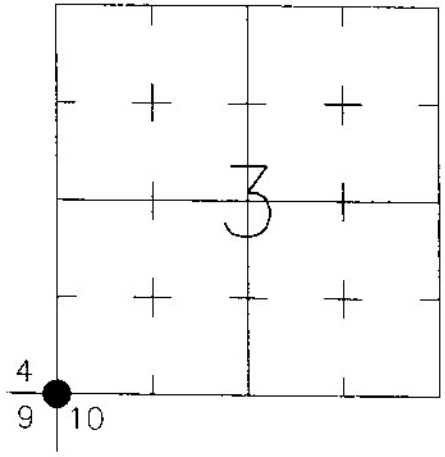

MONUMENT TYPE: ALUMINUM DISK
SIZE: 3-1/4" DIAM.
DEPTH/HEIGHT: 12" BELOW GRADE
REFERENCE TIE DRAWING:

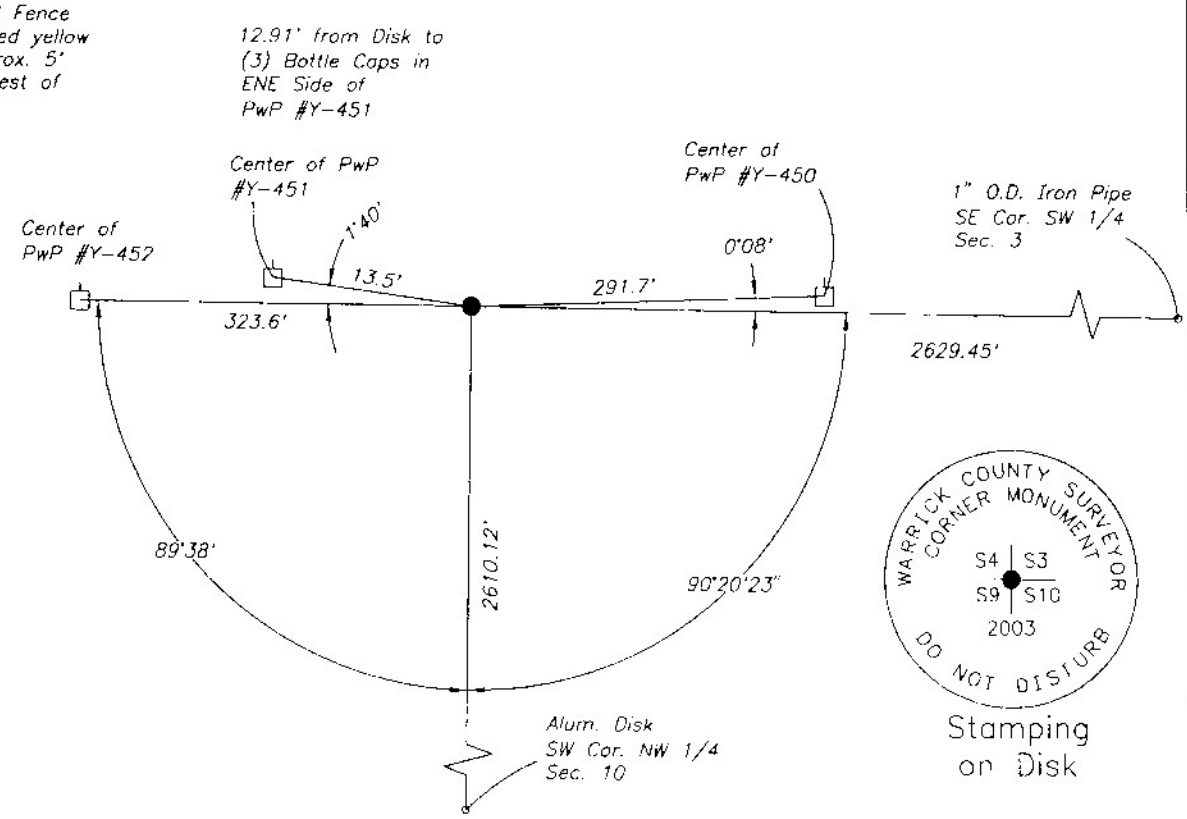

Stamping on Disk

STATE PLANE COORDINATE DATA:
INDIANA WEST ZONE, NAD 83 (1997)
U.S. SURVEY FEET

X ___

Y ___

COORDINATES ESTABLISHED BY:

APPROVED BY:

DATE:

REFERENCED BY: D.DREES/G.M.BURRESS DATE: 5/23/03

APPROVED BY: P.JONES, RLS#9600016 DATE: 5/29/03

CORNER FILE CODE:
T6S-R9W-E--13